ROYALOHM

C O N F I D E N T I A L D O C U M E N T

SPECIFICATION FOR APPROVAL

TRELIK

Description : Thick Film Chip Resistors (Terminal Lead Free)

Royalohm Part no.:

1206W4xxxxxT5E (RMC 1/4W (1206) +/-1%, 5% & Jumper)

Approved by

Parts corresponding to RoHS Compliant: 2005-Apr.-1

Royal Electronic Factory (Thailand) Co., Ltd.
20/1-2 Moo 2 Klong-Na, Muang
Chachoengsao 24000, Thailand
Tel: +66-38-822404-8
Fax: +66 38-981190 / 823765
E-mail Address: Export sales: Export@royalohm.com
Local sales: Local@royalohm.com
http://www.royalohm.com
P.O. Box 251 Klongchan, Bangkok 10240, Thailand

Approved	Checked	Prepared
Mr. Jack Lin	Mr. S. Polthanasan	Ms. P. Supatta

Issue Date: 2015/01/10

CHANGE NOTIFICATION HISTORY			
Version	**Date of Version**	**History**	**Remark**
1	2015/01/10	1. Chip series (1206) @ 1/4W	
		2. Resistance tolerance: ±1%, ±5% & Jumper	
		3. Temperature coefficient 1Ω-10Ω : ± 400 PPM/℃	
		11Ω-100Ω : ± 200 PPM/℃	
		>100Ω : ± 100 PPM/℃	

Customer: TRELIK	**Part. No.: 1206W4xxxxxT5E**

1. Scope:

This specification for approval relates to Thick Film Chip Resistors (Terminal Lead Free) manufactured by ROYALOHM 's specifications.

2. Type designation:

The type designation shall be in the following form:

	Type	Power Rating	Resistance tolerance	Nominal Resistance
Ex.	RMC 1206	0.25W (1/4W)	F, J	1KΩ

3. Ratings:

Type	RMC 1206
Power Rating	0.25W (1/4W)
Rated Current (Jumper)	2A
Max. Overload Current (Jumper)	10A
Max. Working Voltage	200 V
Max. Overload Voltage	400 V
Dielectric Withstanding Voltage	500 V
Temperature Range	-55℃～+155℃
Ambient Temperature	70 ℃

3.1 Power rating:

Resistors shall have a power rating based on continuous load operation at an ambient temperature of 70 ℃ . For temperature in excess of 70 ℃ , The load shall be derate as shown in figure 1.

Figure 1

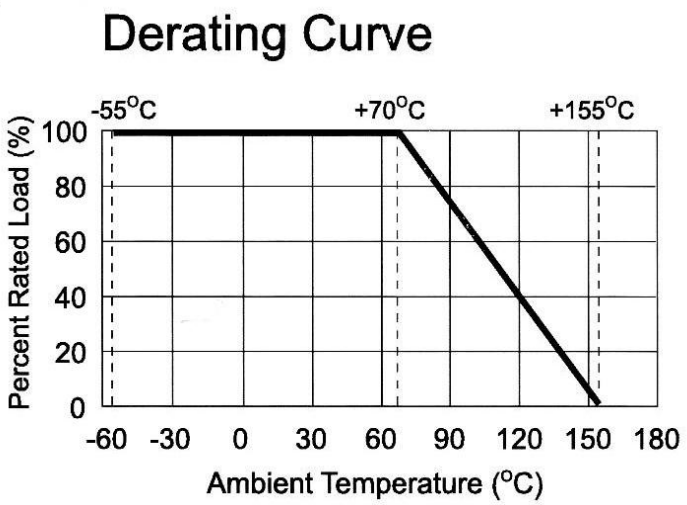

3.2 Nominal Resistance

Effective figures of nominal resistance shall be in accordance with E-24 and E-96 series. E-96 series for 1% and E-24 series for 2%, 5%.

Thick Film Chip Resistors (Terminal Lead Free)

4. Construction :

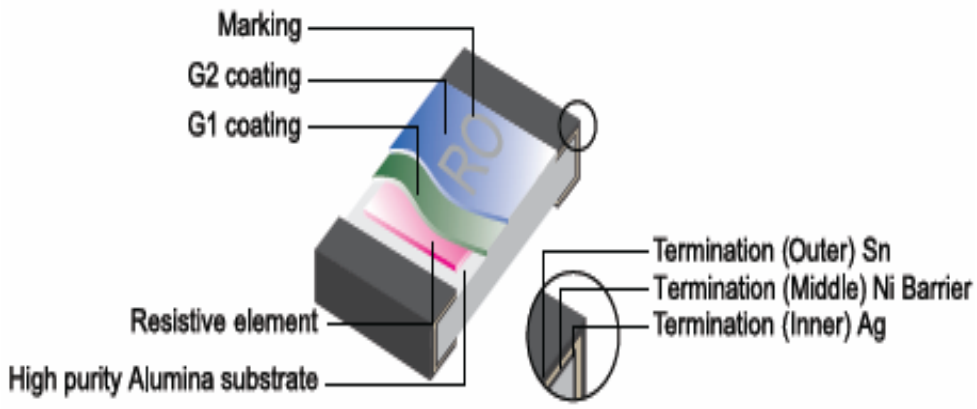

5. Power rating and dimensions

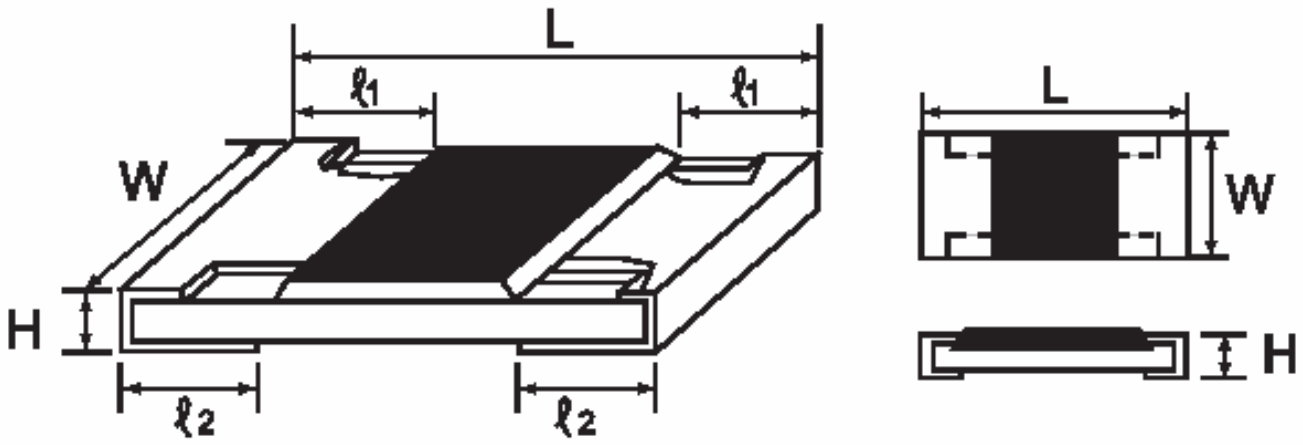

Dimension :

Type	Dimension (mm)				
	L ± 0.15	W + 0.15 - 0.10	H ± 0.10	ℓ1 ± 0.20	ℓ2 ± 0.20
RMC 1206	3.10	1.55	0.55	0.45	0.45

Power Rating :

Type	Power Rating at 70 ℃	Tolerance %	Resistance Range	Standard Series
RMC 1206	1/4W	Jumper	< 50mΩ	
		± 1	10Ω ~ 1MΩ	E-96
		± 5	1Ω ~ 10MΩ	E-24

Thick Film Chip Resistors (Terminal Lead Free)

6. Marking :

6.1 Resistors

A. Marking for E-96 series in 1206 size : 4 Digits

*The first 3 digits are singnificant figures of resistance and the 4th digit denoted number of zeros.

Ex.

	1003	

100KΩ

*For ohmic values below 100 Ω, letter"R" is for decimal point.

Ex.

	1R80	

1.8Ω

B. Marking for E-24 series in 1206 size : 3 Digits

*The first 2 digits are singnificant figures of resistance and the 3rd digit denoted number of zeros.

Ex.

	102	

1KΩ

*For ohmic values below 10 Ω, letter"R" is for decimal point.

Ex.

	R68	

0.68Ω

6.2 Labels

Label shall be marked with the following item :

A. Nominal Resistance and Resistance Tolerance

B. Power Rating and Size

C. Quantity

D. Part No.

E. P.O.No.

F. Lot No.

Ex.

ROYALOHM
CHIP RESISTOR

RESISTANCE:	1K	Ω	± 5 %	
WATTAGE:	1/4W		SIZE:	1206
QUANTITY:	5,000	PCS	Pb-Free	
PART NO.:				
P.O.NO.:				
LOT NO. :	6050008	1206W4J0102T5E		

Remark : Label is 1K, value is 1KΩ, marking is 102

Thick Film Chip Resistors (Terminal Lead Free)

7. Performance specification :

Characteristics	Limits	Test Methods (JIS C 5201-1)
*Insulation resistance	1,000 MΩ or more	Apply 500V DC between protective coating and termination for 1 min, then measure (Sub-clause 4.6)
*Dielectric withstanding voltage	No evidence of flashover mechanical damage, arcing or insulation break down	Apply 500V AC between protective coating and termination for 1 minute (Sub-clause 4.7)
Temperature coefficient	1Ω-10Ω : ± 400 PPM/℃ 11Ω-100Ω : ± 200 PPM/℃ >100Ω : ± 100 PPM/℃	Natural resistance change per temp. degree centigrade. $\frac{R_2-R_1}{R_1(t_2-t_1)} \times 10^6$ (PPM/℃) R_1: Resistance value at room temperature (t1) R_2: Resistance value at room temp. plus 100 ℃ (t2) (Sub-clause 4.8)
Short time overload	Resistance change rate is ± 5% (2.0% + 0.1Ω) Max. ± 1% (1.0% + 0.1Ω) Max.	Permanent resistance change after the application of a potential of 2.5 times RCWV for 5 seconds (Sub-clause 4.13)
*Solderability	95 % coverage Min.	Test temperature of solder : 245 ± 3℃ Dipping them solder : 2-3 seconds (Sub-clause 4.17)
Soldering temp. reference	Electrical characteristics shall be satisfied. Without distinct deformation in appearance. (95 % coverage Min.)	<u>Wave soldering condition:</u> (2 cycles Max.) Pre-heat : 100 ~ 120 ℃, 30 ± 5 sec. Suggestion solder temp.: 235 ~ 255 ℃, 10 sec. (Max.) Peak temp.: 260 ℃ <u>Reflow soldering condition:</u> (2 cycles Max.) Pre-heat : 150 ~ 180 ℃, 90 ~ 120 sec. Suggestion solder temp.: 235 ~ 255 ℃, 20 ~ 40 sec. Peak temp.: 260 ℃ 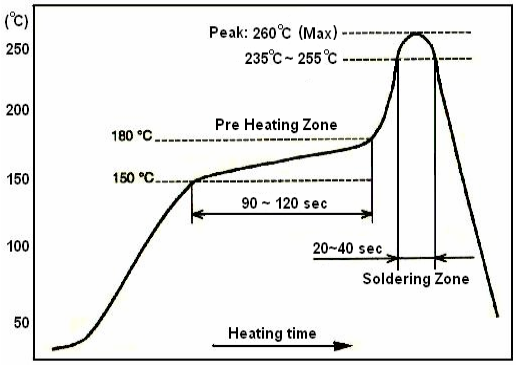 Temperature profile for avaluation <u>Hand soldering condition:</u> The soldering iron tip temperature should be less than 300℃and maximum contract time should be 5 sec.

Thick Film Chip Resistors (Terminal Lead Free)

7. Performance specification :

Characteristics	Limits	Test Methods (JIS C 5201-1)
Soldering Heat	Resistance change rate is: ±(1%+0.05Ω) Max.	Dip the resistor into a solder bath having a temperature of 260°C±3°C and hold it for 10±1 seconds. (Sub-clause 4.18)
Temperature cycling	Resistance change rate is ± 5% (1.0% + 0.05Ω) Max. ± 1% (0.5% + 0.05Ω) Max.	Resistance change after continuous 5 cycles for duty cycle specified below :

Step	Temperature	Time
1	-55℃ ± 3℃	30 mins
2	Room temp.	10～15 mins
3	+155℃ ± 2℃	30 mins
4	Room temp.	10～15 mins

(Sub-clause 4.19)

Load life in humidity	Resistance change rate is ± 5% (3.0% + 0.1Ω) Max. ± 1% (1.0% + 0.1Ω) Max.	Resistance change after 1,000 hours (1.5 hours "on", 0.5 hour "off") at RCWV in a humidity chamber controlled at 40℃ ± 2℃ and 90 to 95 % relative humidity (Sub-clause 4.24.2.1)
Load Life	Resistance change rate is ± 5% (3.0% + 0.1Ω) Max. ± 1% (1.0% + 0.1Ω) Max.	Permanent resistance change after 1,000 hours operating at RCWV, with duty cycle of (1.5 hours"on", 0.5 hour"off") at 70℃ ± 2℃ ambient (Sub-clause 4.25.1)
Terminal bending	Resistance change rate is ± (1.0% + 0.05Ω) Max.	Twist of Test Board : Y/X = 5/90 mm for 10 seconds (Sub-clause 4.33)

The resistors of 0Ω only can do the characteristic noted of *

Thick Film Chip Resistors (Terminal Lead Free)

8. Packing specification :

* Taping Dimension (mm)

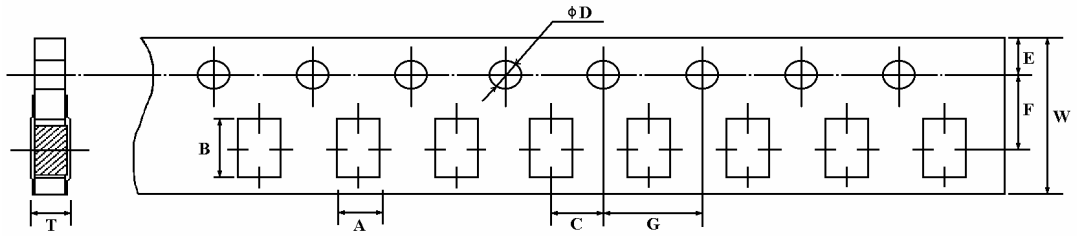

Type	A ± 0.2	B ± 0.2	C ± 0.05	ϕD +0.1 - 0	E ± 0.1	F ± 0.05	G ± 0.1	W ± 0.2	T ± 0.1
RMC 1206	2.00	3.60	2.0	1.5	1.75	3.5	4.0	8.0	0.81

* Peeling Strength of Top Cover Tape

Test Condition: 0.1 to 0.7 N at a peel-off speed of 300 mm / min.

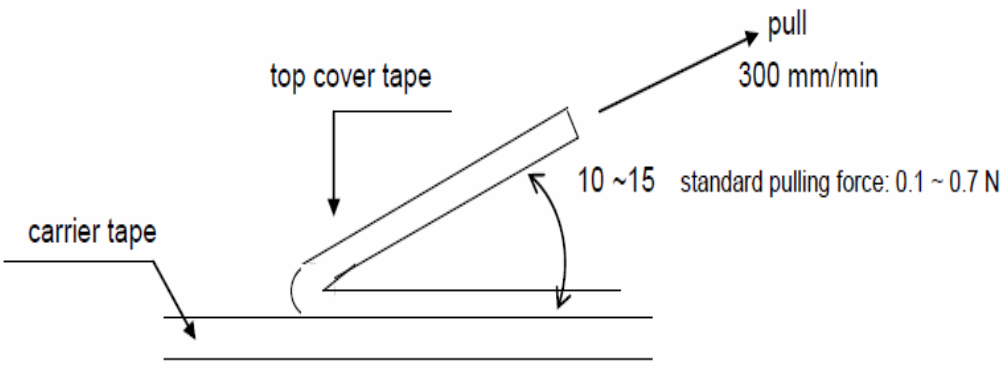

* Reel Dimension (mm)

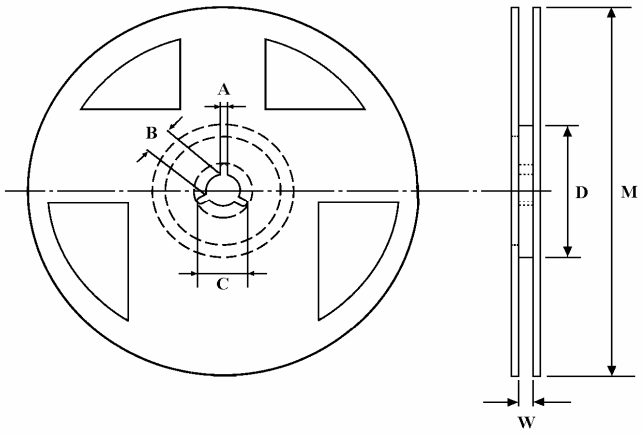

Type	Quantity Per Reel	A ± 0.5	B ± 0.5	C ± 0.5	D ± 1	M ± 2	W ± 1
RMC 1206	5,000 pcs.	2	13	21	60	178	10

Part Number System

Explanation of Part Number System

Thick Film Chip Resistors (Terminal Lead Free)

1	2	3	4	5	6	7	8	9	10	11	12	13	14
1	2	0	6	W	4	J	0	1	0	2	T	5	E

Product Type:
Fill-in these 4 digits with the Chip resistor types as follows:
- 0402
- 0603
- 0805
- 1206
- 1210
- 2010
- 2512

Wattage:
Fill-in these 2 digits with the codes as follows:

Normal size:
- WG = 1/16W
- WA = 1/10W
- W8 = 1/8W
- W4 = 1/4W
- W2 = 1/2W
- 1W = 1W

Small size:
- SA = 1/10W-S
- S8 = 1/8W-S
- S4 = 1/4W-S
- S3 = 1/3W-S
- 07 = 3/4W-S

Special:
- WH = 1/32W

Tolerance:
- F ~ ± 1%
- G ~ ± 2%
- J ~ ± 5%

Resistance Value:
1. E-24 series: the 1st digit is "0", the 2nd & 3rd digits are for the significant figures of the resistance and the 4th indicate the number of zeros following;
2. E-96 series: the 1st to 3rd digits are for the significant figures of the resistance and the 4th digit indicate the number of zeros following.

Decimal point is expressed :
"J"~ 0.1,**"K"**~0.01,**"L"**~0.001
Ex: 2Ω26 ~226K, 226Ω ~2260

Packing Quantity:
- 1 = 1,000pcs
- 2 = 2,000pcs
- 3 = 3,000pcs
- 4 = 4,000pcs
- 5 = 5,000pcs
- A = 500pcs
- B = 2,500pcs
- C = 10,000pcs
- D = 20,000pcs
- E = 15,000pcs
- G = 25,000pcs
- H = 50,000pcs

Packing Type:
- T = T/R Packing
- B = Bulk in Poly-bag
- C = Bulk in cassette

Special Feature:
- 0 = NIL
- E = Lead Free

Sample :	RMC	1/4W	(1206)	+/- 5%	1KΩ	T/R--5000	→	1206W4J0102T5E
	RMC	1/4W	(1206)	+/- 5%	0Ω	T/R--5000	→	1206W4J0000T5E
	RMC	1/4W	(1206)	+/- 1%	1KΩ	T/R--5000	→	1206W4F1001T5E

Thick Film Chip Resistors (Terminal Lead Free)

Environment Related Substance

This product complies to EU RoHS directive, EU PAHs directive, EU PFOS directive and Halogen free.

Ozone layer depleting substances.

Ozone depleting substances are not used in our manufacturing process of this product.
This product is not manufactured using Chloro fluorocarbons (CFCs), Hydrochlorofluorocarbons (HCFCs), Hydrobromofluorocarbons (HBFCs) or other ozone depleting substances in any phase of the manufacturing process.

Storage Condition

The performance of these products, including the solderability, is guaranteed for a year from the date of arrival at your company, provided that they remain packed as they were when delivered and stored at a temperature of 25°C ± 5°C and a relative humidity of 60%RH ± 10%RH

Even within the above guarantee periods, do not store these products in the following conditions. Otherwise, their electrical performance and/or solderability may be deteriorated, and the packaging materials (e.g. taping materials) may be deformed or deteriorated, resulting in mounting failures.

1. In salty air or in air with a high concentration of corrosive gas, such as Cl_2, H_2S, NH_3, SO_2, or NO_2
2. In direct sunlight