High Frequency Transistor
NPN Silicon

MPS5179

Motorola Preferred Device

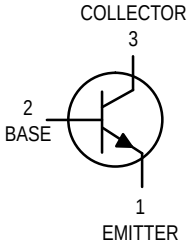

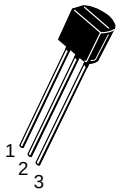

CASE 29–04, STYLE 1
TO–92 (TO–226AA)

MAXIMUM RATINGS

Rating	Symbol	Value	Unit
Collector–Emitter Voltage	V_{CEO}	12	Vdc
Collector–Base Voltage	V_{CBO}	20	Vdc
Emitter–Base Voltage	V_{EBO}	2.5	Vdc
Collector Current — Continuous	I_C	50	mAdc
Total Device Dissipation @ T_A = 25°C Derate above 25°C	P_D	200 1.14	mW mW/°C
Total Device Dissipation @ T_C = 25°C Derate above 25°C	P_D	300 1.71	mW mW/°C
Storage Temperature Range	T_{stg}	–55 to +150	°C

ELECTRICAL CHARACTERISTICS (T_A = 25°C unless otherwise noted)

Characteristic	Symbol	Min	Max	Unit
OFF CHARACTERISTICS				
Collector–Emitter Sustaining Voltage (I_C = 3.0 mAdc, I_B = 0)	$V_{CEO(sus)}$	12	—	Vdc
Collector–Base Breakdown Voltage (I_C = 0.001 mAdc, I_E = 0)	$V_{(BR)CBO}$	20	—	Vdc
Emitter–Base Breakdown Voltage (I_E = 0.01 mAdc, I_C = 0)	$V_{(BR)EBO}$	2.5	—	Vdc
Collector Cutoff Current (V_{CB} = 15 Vdc, I_E = 0) (V_{CB} = 15 Vdc, I_E = 0, T_A = 150°C)	I_{CBO}	 — —	 0.02 1.0	μAdc
ON CHARACTERISTICS				
DC Current Gain (I_C = 3.0 mAdc, V_{CE} = 1.0 Vdc)	h_{FE}	25	250	—
Collector–Emitter Saturation Voltage (I_C = 10 mAdc, I_B = 1.0 mAdc)	$V_{CE(sat)}$	—	0.4	Vdc
Base–Emitter Saturation Voltage (I_C = 10 mAdc, I_B = 1.0 mAdc)	$V_{BE(sat)}$	—	1.0	Vdc

Preferred devices are Motorola recommended choices for future use and best overall value.

ELECTRICAL CHARACTERISTICS (T_A = 25°C unless otherwise noted) (Continued)

Characteristic	Symbol	Min	Max	Unit
SMALL–SIGNAL CHARACTERISTICS				
Current–Gain — Bandwidth Product(1) (I_C = 5.0 mAdc, V_{CE} = 6.0 Vdc, f = 100 MHz)	f_T	900	2000	MHz
Collector–Base Capacitance (V_{CB} = 10 Vdc, I_E = 0, f = 0.1 to 1.0 MHz)	C_{cb}	—	1.0	pF
Small Signal Current Gain (I_C = 2.0 mAdc, V_{CE} = 6.0 Vdc, f = 1.0 kHz)	h_{fe}	25	300	—
Collector Base Time Constant (I_E = 2.0 mAdc, V_{CB} = 6.0 Vdc, f = 31.9 MHz)	$rb'C_c$	3.0	14	ps
Noise Figure (See Figure 1) (I_C = 1.5 mAdc, V_{CE} = 6.0 Vdc, R_S = 50 ohms, f = 200 MHz)	NF	—	5.0	dB
Common–Emitter Amplifier Power Gain (See Figure 1) (V_{CE} = 6.0 Vdc, I_C = 5.0 mAdc, f = 200 MHz)	G_{pe}	15	—	dB

1. f_T is defined as the frequency at which $|h_{fe}|$ extrapolates to unity.

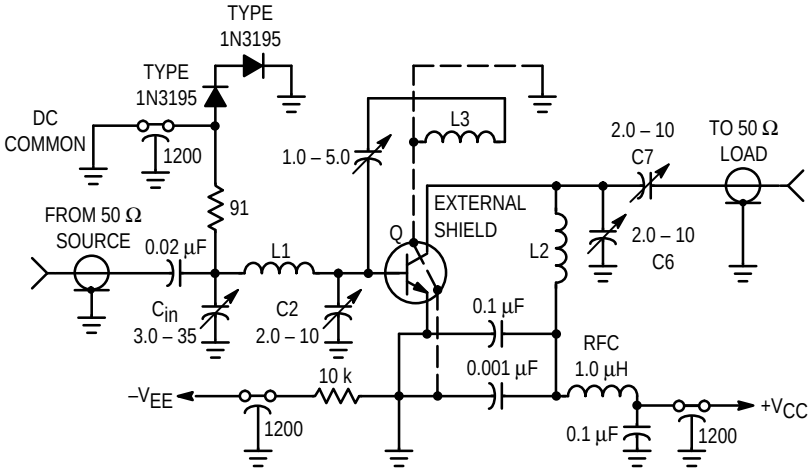

L1 1–3/4 Turns, #18 AWG, 0.5″ L, 0.5″ Diameter
L2 2 Turns, #16 AWG, 0.5″ L, 0.5″ Diameter
L3 2 Turns, #13 AWG, 0.25″ L, 0.5″ Diameter (Position 1/4″ from L2)

Figure 1. 200 MHz Amplifier Power Gain and Noise Figure Circuit

PACKAGE DIMENSIONS

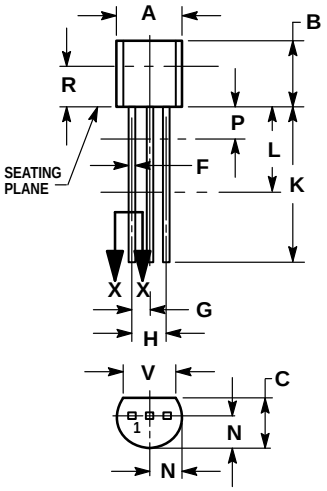

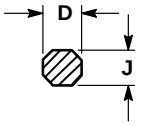

SECTION X–X

NOTES:
1. DIMENSIONING AND TOLERANCING PER ANSI Y14.5M, 1982.
2. CONTROLLING DIMENSION: INCH.
3. CONTOUR OF PACKAGE BEYOND DIMENSION R IS UNCONTROLLED.
4. DIMENSION F APPLIES BETWEEN P AND L. DIMENSION D AND J APPLY BETWEEN L AND K MINIMUM. LEAD DIMENSION IS UNCONTROLLED IN P AND BEYOND DIMENSION K MINIMUM.

	INCHES		MILLIMETERS	
DIM	MIN	MAX	MIN	MAX
A	0.175	0.205	4.45	5.20
B	0.170	0.210	4.32	5.33
C	0.125	0.165	3.18	4.19
D	0.016	0.022	0.41	0.55
F	0.016	0.019	0.41	0.48
G	0.045	0.055	1.15	1.39
H	0.095	0.105	2.42	2.66
J	0.015	0.020	0.39	0.50
K	0.500	—	12.70	—
L	0.250	—	6.35	—
N	0.080	0.105	2.04	2.66
P	—	0.100	—	2.54
R	0.115	—	2.93	—
V	0.135	—	3.43	—

CASE 029–04
(TO–226AA)
ISSUE AD

STYLE 1:
PIN 1. EMITTER
2. BASE
3. COLLECTOR

How to reach us:
USA / EUROPE / Locations Not Listed: Motorola Literature Distribution;
P.O. Box 20912; Phoenix, Arizona 85036. 1–800–441–2447 or 602–303–5454

MFAX: RMFAX0@email.sps.mot.com – TOUCHTONE 602–244–6609
INTERNET: http://Design–NET.com

JAPAN: Nippon Motorola Ltd.; Tatsumi–SPD–JLDC, 6F Seibu–Butsuryu–Center,
3–14–2 Tatsumi Koto–Ku, Tokyo 135, Japan. 03–81–3521–8315

ASIA / PACIFIC: Motorola Semiconductors H.K. Ltd.; 8B Tai Ping Industrial Park,
51 Ting Kok Road, Tai Po, N.T., Hong Kong. 852–26629298