Quad +15V 256-Step DigiPOTs with Pin Selectable SPI / I²C Digital Interface

Preliminary Technical Data AD5263

FEATURES

256 Position
4-Channel (Independently Programmable)
20k, 50k, 200k Ohms
Low Temperature Coefficient 50ppm/°C
Selectable Digital Interface (3-Wire SPI Compatible or 2-Wire I²C Compatible Serial Data Input)
Operating temperature range -40 to 125°C
+5 to +15V Single-Supply; ±5V Dual-Supply Operation

APPLICATIONS

Mechanical Potentiometer Replacement
Optical Network Laser LED Adjust
Instrumentation: Gain, Offset Adjustment
Stereo Channel Audio Level Control
Automotive Electronics Adjustment
Programmable Voltage to Current Conversion
Programmable Filters, Delays, Time Constants
Line Impedance Matching
Low Resolution DAC Replacement

GENERAL DESCRIPTION

The AD5263 is the industry first quad channel, 256 position, digital potentiometer[1] selectable digital interface. These devices perform the same electronic adjustment function as mechanical potentiometers or variable resistor with enhanced resolution, solid-state reliability, and superior low temperature coefficient performance. Each Channel of the AD5263 contains a fixed resistor with a wiper contact that taps the fixed resistor value at a point determined by a digital code loaded into the 3 wire SPI or 2-wire I²C compatible serial-input register. The resistance between the wiper and either end point of the fixed resistor varies linearly with respect to the digital code transferred into the RDAC latch[1]. The variable resistor offers a completely programmable value of resistance, between the A terminal and the wiper or the B terminal and the wiper. The fixed A to B terminal resistance of 20k, 50k or 200kΩ has a nominal temperature coefficient of 50 ppm/°C. Unlike majority of the digital potentiometers in the market, these devices can operate up to 15V or ±5V provided proper supply voltages are furnished.

The AD5263 are available in thin narrow body TSSOP-24. All parts are guaranteed to operate over the extended automotive temperature range of -40°C to +125°C.

Functional Block Diagram

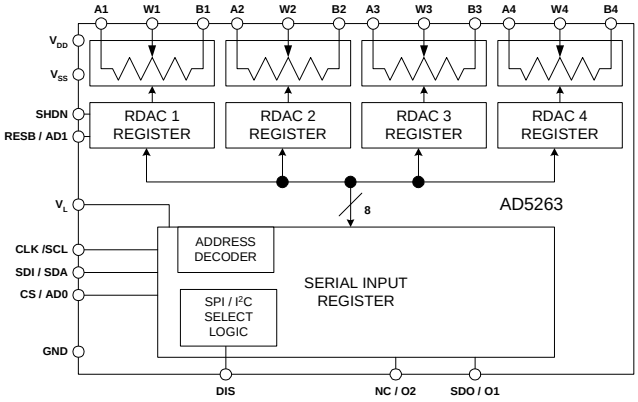

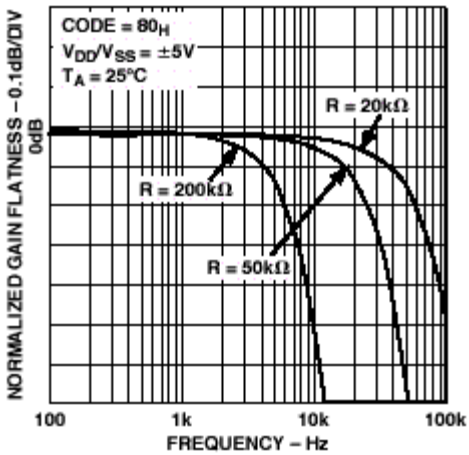

Figure 1 Normalized Gain Flatness Versus Frequency.

08 AUG '02, REV PrD

Information furnished by Analog Devices is believed to be accurate and reliable. However, no responsibility is assumed by Analog Devices for its use; nor for any infringements of patents or other rights of third parties which may result from its use. No license is granted by implication or otherwise under any patent or patent rights of Analog Devices.

One Technology Way, P.O. Box 9106, Norwood, MA 02062-9106 U.S.A.
Tel: 781/329-4700 World Wide Web Site: http://www.analog.com
Fax: 781/326-8703
© Analog Devices, Inc., 2002

ELECTRICAL CHARACTERISTICS 20K, 50K, 200K OHM VERSION (V_{DD} = +5V, V_{SS} = -5V, V_L = +5V, V_A = +V_{DD}, V_B = 0V, -40°C < T_A < +125°C unless otherwise noted.)

Parameter	Symbol	Conditions	Min	Typ[1]	Max	Units
DC CHARACTERISTICS RHEOSTAT MODE	Specifications apply to all VRs					
Resistor Differential NL[2]	R-DNL	R_{WB}, V_A=NC	-1	±1/4	+1	LSB
Resistor Nonlinearity[2]	R-INL	R_{WB}, V_A=NC	-2	±1/2	+2	LSB
Nominal resistor tolerance[3]	ΔR_{AB}	T_A = 25°C	-30		30	%
Resistance Temperature Coefficient	$\Delta R_{AB}/\Delta T$	Wiper = No Connect		30		ppm/°C
Wiper Resistance	R_W	I_W = 1 V/R_{AB}, V_{DD} = +5V		50	100	Ω
DC CHARACTERISTICS POTENTIOMETER DIVIDER MODE	Specifications apply to all VRs					
Resolution	N		8			Bits
Differential Nonlinearity[4]	DNL		–1	±1/4	+1	LSB
Integral Nonlinearity[4]	INL		–2	±1/2	+2	LSB
Voltage Divider Temperature Coefficient	$\Delta V_W/\Delta T$	Code = 40_H		5		ppm/°C
Full-Scale Error	V_{WFSE}	Code = FF_H	–2	-1	+0	LSB
Zero-Scale Error	V_{WZSE}	Code = 00_H	0	+1	+2	LSB
RESISTOR TERMINALS						
Voltage Range[5]	$V_{A,B,W}$		V_{SS}		V_{DD}	V
Capacitance[6] Ax, Bx	$C_{A,B}$	f = 1 MHz, measured to GND, Code = 40_H		TBD		pF
Capacitance[6] Wx	C_W	f = 1 MHz, measured to GND, Code = 40_H		TBD		pF
Common-Mode Leakage	I_{CM}	V_A =V_B = V_{DD} / 2		1		nA
DIGITAL INPUTS						
Input Logic High	V_{IH}		2.4			V
Input Logic Low	V_{IL}				0.8	V
Input Logic High	V_{IH}	V_L = +3V, V_{SS} = 0V	2.1			V
Input Logic Low	V_{IL}	V_L = +3V, V_{SS} = 0V			0.6	V
Input Current	I_{IL}	V_{IN} = 0V or +5V			±1	µA
Input Capacitance[6]	C_{IL}			5		pF
DIGITAL Output						
O1, O2	V_{OH}	I_{OH}=0.4mA	2.4		5.5	V
O1, O2	V_{OL}	I_{OL}=-1.6mA	0		0.4	V
SDA	V_{OL}	I_{OL} = -6mA			0.6	V
SDA	V_{OL}	I_{OL} = -3mA			0.4	V
Three-State Leakage Current	I_{OZ}	V_{IN} = 0V or +5V			±1	µA
Output Capacitance[6]	C_{OZ}			3	8	pF
POWER SUPPLIES						
Logic Supply	V_L		2.7		5.5	V
Power Single-Supply Range	$V_{DD\ RANGE}$	V_{SS} = 0V	5		16.5	V
Power Dual-Supply Range	$V_{DD/SS\ RANGE}$		±4.5		±5.5	V
Logic Supply Current	I_L	V_L = +5V			60	µA
Positive Supply Current	I_{DD}	V_{IH} = +5V or V_{IL} = 0V			1	µA
Negative Supply Current	I_{SS}	V_{SS} = -5V			1	µA
Power Dissipation[9]	P_{DISS}	V_{IH} = +5V or V_{IL} = 0V, V_{DD} = +5V, V_{SS} = -5V			0.6	mW
Power Supply Sensitivity	PSS	ΔV_{DD} = +5V ±10%		0.0002	0.005	%/%
DYNAMIC CHARACTERISTICS[6, 10]						
Bandwidth –3dB	BW_20K	R_{AB} = 20KΩ		400		KHz
Total Harmonic Distortion	THD_W	V_A =1Vrms, V_B = 0V, f=1KHz, R_{AB} = 20KΩ		0.008		%
V_W Settling Time	t_S	V_A= 10V, V_B=0V, ±1 LSB error band		2		µs
Resistor Noise Voltage	e_{N_WB}	R_{WB} = 10KΩ, f = 1KHz, RS = 0		9		nV√Hz

ELECTRICAL CHARACTERISTICS 20K, 50K, 200K OHM VERSION (V_{DD} = +5V, V_{SS} = -5V, V_L = +5V, V_A = +V_{DD}, V_B = 0V, -40°C < T_A < +125°C unless otherwise noted.)

Parameter	Symbol	Conditions	Min	Typ[1]	Max	Units
SPI (DIS='0') INTERFACE TIMING CHARACTERISTICS applies to all parts (Notes 6,12)						
Input Clock Pulse Width	t_{CH},t_{CL}	Clock level high or low	50			ns
Data Setup Time	t_{DS}		20			ns
Data Hold Time	t_{DH}		20			ns
CLK to SDO Propagation Delay[13]	t_{PD}	R_L = 1KΩ, C_L < 20pF	1		150	ns
CS Setup Time	t_{CSS}		20			ns
CS High Pulse Width	t_{CSW}		40			ns
Reset Pulse Width	t_{RS}		90			ns
CLK Fall to CS Rise Hold Time	t_{CSH}		0			ns
CS Rise to Clock Rise Setup	t_{CS1}		10			ns
I^2C (DIS='1') INTERFACE TIMING CHARACTERISTICS applies to all parts(Notes 6,12)						
SCL Clock Frequency	f_{SCL}		0		400	KHz
t_{BUF} Bus free time between STOP & START	t_1		1.3			µs
$t_{HD;STA}$ Hold Time (repeated START)	t_2	After this period the first clock pulse is generated	0.6			µs
t_{LOW} Low Period of SCL Clock	t_3		1.3			µs
t_{HIGH} High Period of SCL Clock	t_4		0.6			µs
$t_{SU;STA}$ Setup Time For START Condition	t_5		0.6			µs
$t_{HD;DAT}$ Data Hold Time	t_6		0		0.9	µs
$t_{SU;DAT}$ Data Setup Time	t_7		100			ns
t_F Fall Time of both SDA & SCL signals	t_8				300	ns
t_R Rise Time of both SDA & SCL signals	t_9				300	ns
$t_{SU;STO}$ Setup time for STOP Condition	t_{10}		0.6			µs

NOTES:

1. Typicals represent average readings at +25°C and V_{DD} = +5V, V_{SS} = -5V.
2. Resistor position nonlinearity error R-INL is the deviation from an ideal value measured between the maximum resistance and the minimum resistance wiper positions. R-DNL measures the relative step change from ideal between successive tap positions. Parts are guaranteed monotonic. I_W = V_{DD}/R for both V_{DD}=+5V, V_{SS}=-5V.
3. V_{AB} = V_{DD}, Wiper (V_W) = No connect
4. INL and DNL are measured at V_W with the RDAC configured as a potentiometer divider similar to a voltage output D/A converter. VA = V_{DD} and V_B = 0V. DNL specification limits of ±1LSB maximum are Guaranteed Monotonic operating conditions.
5. Resistor terminals A, B, W have no limitations on polarity with respect to each other.
6. Guaranteed by design and not subject to production test.
7. Measured at the Ax terminals. All Ax terminals are open circuited in shutdown mode.
8. Worst case supply current consumed when input all logic-input levels set at 2.4V, standard characteristic of CMOS logic.
9. P_{DISS} is calculated from (I_{DD} x V_{DD}). CMOS logic level inputs result in minimum power dissipation.
10. All dynamic characteristics use V_{DD} = +5V, V_{SS} = -5V, V_L = +5V.
11. Measured at a V_W pin where an adjacent V_W pin is making a full-scale voltage change.
12. See timing diagram for location of measured values. All input control voltages are specified with t_R=t_F=2ns(10% to 90% of +3V) and timed from a voltage level of 1.5V. Switching characteristics are measured using V_L = +5V.
13. Propagation delay depends on value of V_{DD}, R_L, and C_L see applications text.
14. The AD5260/AD5262 contains 1,968 transistors. Die Size: 89mil x 105mil, 9,345sq. mil.

ABSOLUTE MAXIMUM RATINGS (T_A = +25°C, unless otherwise noted)

V_{DD} to GND ..... -0.3, +15V
V_{SS} to GND ..... 0V, -7V
V_{DD} to V_{SS} ..... +15V
V_A, V_B, V_W to GND ..... V_{SS}, V_{DD}
$A_X – B_X$, $A_X – W_X$, $B_X – W_X$
Intermittent[2] ..... ±20mA
Continuous ..... ±2mA
Digital Inputs & Output Voltage to GND ..... 0V, +7V
Operating Temperature Range ..... -40°C to +85°C
Maximum Junction Temperature ($T_{J\,MAX}$) ..... +150°C
Storage Temperature ..... -65°C to +150°C
Lead Temperature (Soldering, 10 sec) ..... +300°C
Vapor Phase (60 sec) ..... +215 °C
Infrared (15 sec) ..... +220 °C
Thermal Resistance* θ_{JA},
TSSOP-24 ..... 143°C/W
*Package Power Dissipation = (T_JMAX - T_A) / θ_{JA}

NOTES
1. Stresses above those listed under Absolute Maximum Ratings may cause permanent damage to the device. This is a stress rating; functional operation of the device at these or any other conditions above those listed in the operational sections of this specification is not implied. Exposure to absolute maximum rating conditions for extended periods may affect device reliability.
2. Maximum terminal current is bounded by the maximum current handling of the switches, maximum power dissipation of the package, and maximum applied voltage across any two of the A, B, and W terminals at a given resistance.

ORDERING GUIDE

Model	R_{AB} (kΩ)	Temp	Package Description	Package Option	# Parts per Container	Top Mark*
AD5263BRU20	20	-40/+125°C	TSSOP-24	RU-24	62	AD5263B20
AD5263BRU20-REEL7	20	-40/+125°C	TSSOP-24	RU-24	1,000	AD5263B20
AD5263BRU50	50	-40/+125°C	TSSOP-24	RU-24	62	AD5263B50
AD5263BRU50-REEL7	50	-40/+125°C	TSSOP-24	RU-24	1,000	AD5263B50
AD5263BRU200	200	-40/+125°C	TSSOP-24	RU-24	62	AD5263B200
AD5263BRU200-REEL7	200	-40/+125°C	TSSOP-24	RU-24	1,000	AD5263B200

*Line 1 contains part number, line 2 branding containing differentiating detail by part type and ADI logo symbol, line 3 contains date code YWW.

CAUTION

ESD (electrostatic discharge) sensitive device. Electrostatic charges as high as 4000 V readily accumulate on the human body and test equipment and can discharge without detection. Although the AD5263 features proprietary ESD protection circuitry, permanent damage may occur on devices subjected to high-energy electrostatic discharges. Therefore, proper ESD precautions are recommended to avoid performance degradation or loss of functionality.

SPI Compatible Digital Interface (DIS=’0’)

TABLE IA: SPI 10-Bit Serial-Data Word Format

ADDR		DATA							
B9	**B8**	**B7**	**B6**	**B5**	**B4**	**B3**	**B2**	**B1**	**B0**
A1	A0	D7	D6	D5	D4	D3	D2	D1	D0
		MSB							LSB
2^9		2^7							2^0

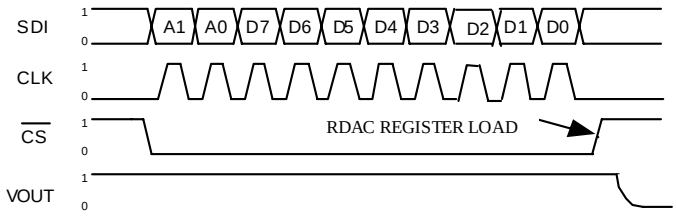

Figure 1A. SPI Timing Diagram

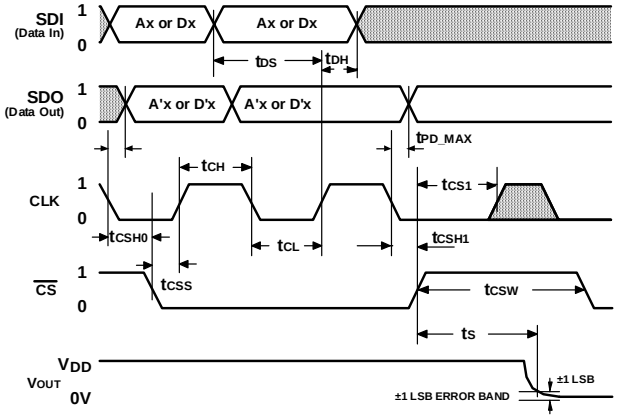

Figure 1B. Detail SPI Timing Diagram

I²C Compatible Digital Interface (DIS=’1’)

TABLE IIA: I²C Write Mode Data Word Format

S	**0**	**1**	**0**	**1**	**1**	**AD1**	**AD0**	**$\overline{W}$**	**A**	**X**	**A1**	**A0**	**RS**	**SD**	**O1**	**O2**	**X**	**A**	**D7**	**D6**	**D5**	**D4**	**D3**	**D2**	**D1**	**D0**	**A**	**P**
	Slave Address Byte									Instruction Byte									Data Byte									

TABLE IIB: I²C Read Mode Data Word Format:

S	**0**	**1**	**0**	**1**	**1**	**0**	**AD0**	**R**	**A**	**D7**	**D8**	**D5**	**D4**	**D3**	**D2**	**D1**	**D0**	**A**	**P**
	Slave Address Byte									Data Byte									

S = Start Condition
P = Stop Condition
A = Acknowledge
AD1, AD0 = Package pin programmable address bits, Must match with the logic states at pins AD1, AD0
A1, A0 = RDAC sub address select
RS = Software Reset wiper (A1, A0) to mid scale position
SD = Shutdown active high, ties wiper (A1, A0) to terminal A, opens terminal B, RDAC register contents are not disturbed. To exit shutdown a command SD = ‘0’ must be executed for each RDAC (A1, A0).
$\overline{W}$ = Write = ‘0’
R = Read = ‘1’
D7,D6,D5,D4,D3,D2,D1,D0 = Data Bits
X = Don’t Care

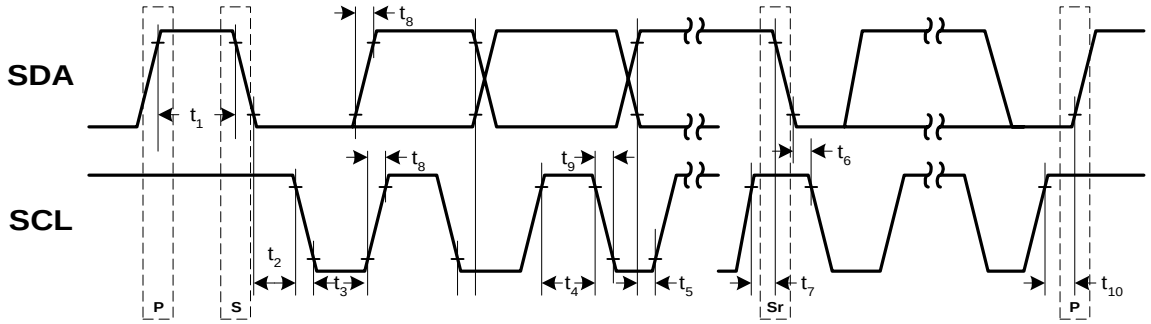

Figure 2. I²C Compatible Detail Timing Diagram

AD5263 PIN CONFIGURATION

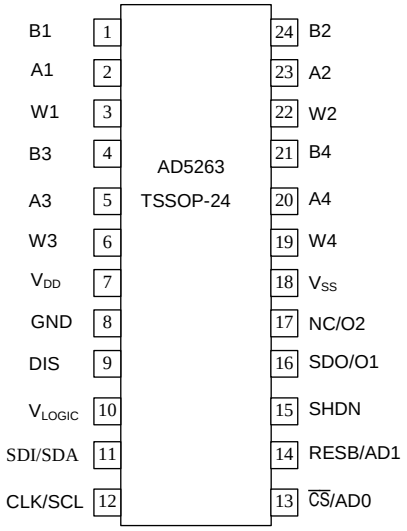

TABLE III: AD5263 PIN Descriptions

Pin	Name	Description
1	B1	Resistor terminal B1
2	A1	Resistor terminal A1 (ADDR=00)
3	W1	Wiper terminal W1
4	B3	Resistor terminal B3
5	A3	Resistor terminal A3
6	W3	Wiper terminal W3 (ADDR=10)
7	V_{DD}	Positive power supply, specified for +5V to +15V operation
8	GND	Ground
9	DIS	Digital Interface Select (SPI/I^2C Select); SPI when DIS='0', I^2C when DIS='1'
10	V_{LOGIC}	Logic Supply Voltage, needs to be same voltage as the digital logic controlling the AD5263.
11	SDI/SDA	SDI = 3-wire Serial Data Input/ SDA = 2-wire Serial Data Input/Output
12	CLK/SCL	Serial Clock Input
13	$\overline{CS}$/AD0	Chip Select / I^2C Compatabile Device Address Bit 0
14	RESB/AD1	RESETB/I^2C Compatabile Device Address Bit 1
15	SHDN	Shutdown -- Ties wiper to terminal A, opens terminal B
16	SDO/O1	Serial Data Output, Open Drain transistor requires pull-up resistor/Digital Output O1, can be used to drive external logic
17	NC/O2	No Connection/Digital Output O2, can be used to drive external logic
18	V_{SS}	Negative power supply, specified for operation from 0 to -5V.
19	W4	Wiper terminal W4 (ADDR=11)
20	A4	Resistor terminal A4
21	B4	Resistor terminal B4
22	W2	Wiper terminal W2 (ADDR=01)
23	A2	Resistor terminal A2
24	B2	Resistor terminal B2

OUTLINE DIMENSIONS

Dimensions shown in inches and (mm)
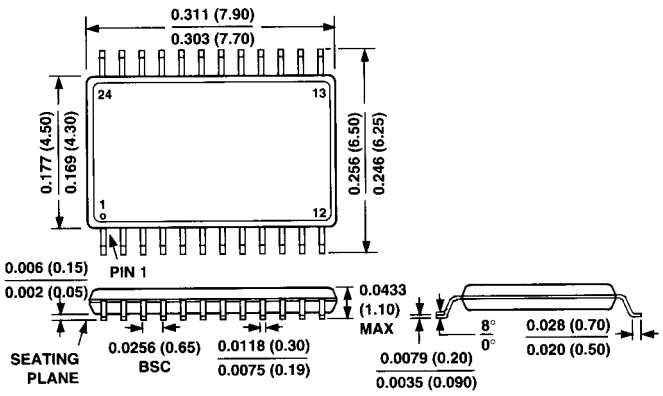
24-Lead Thin Surface Mount TSSOP Package (RU-24)